SHELTER SHUTTERS
US PAT. NO.:9,243,445
Belmar, NJ
732-681-4900
Email: steve@sheltershutters.com
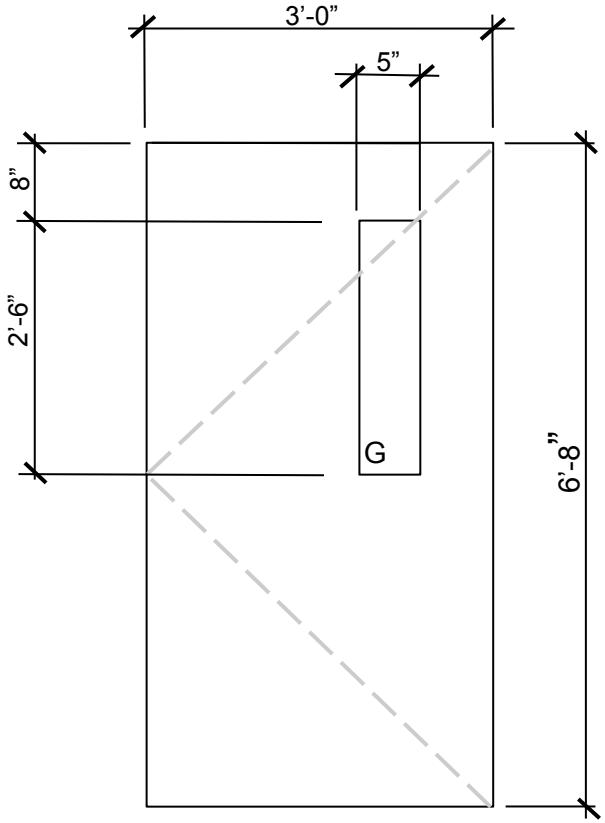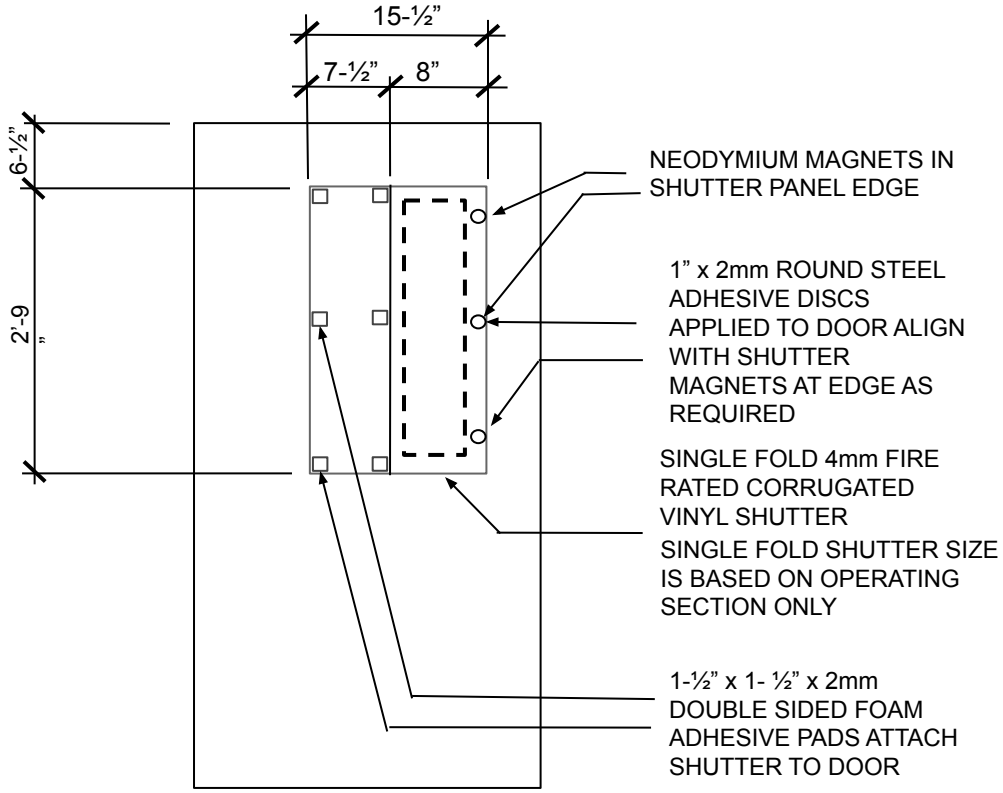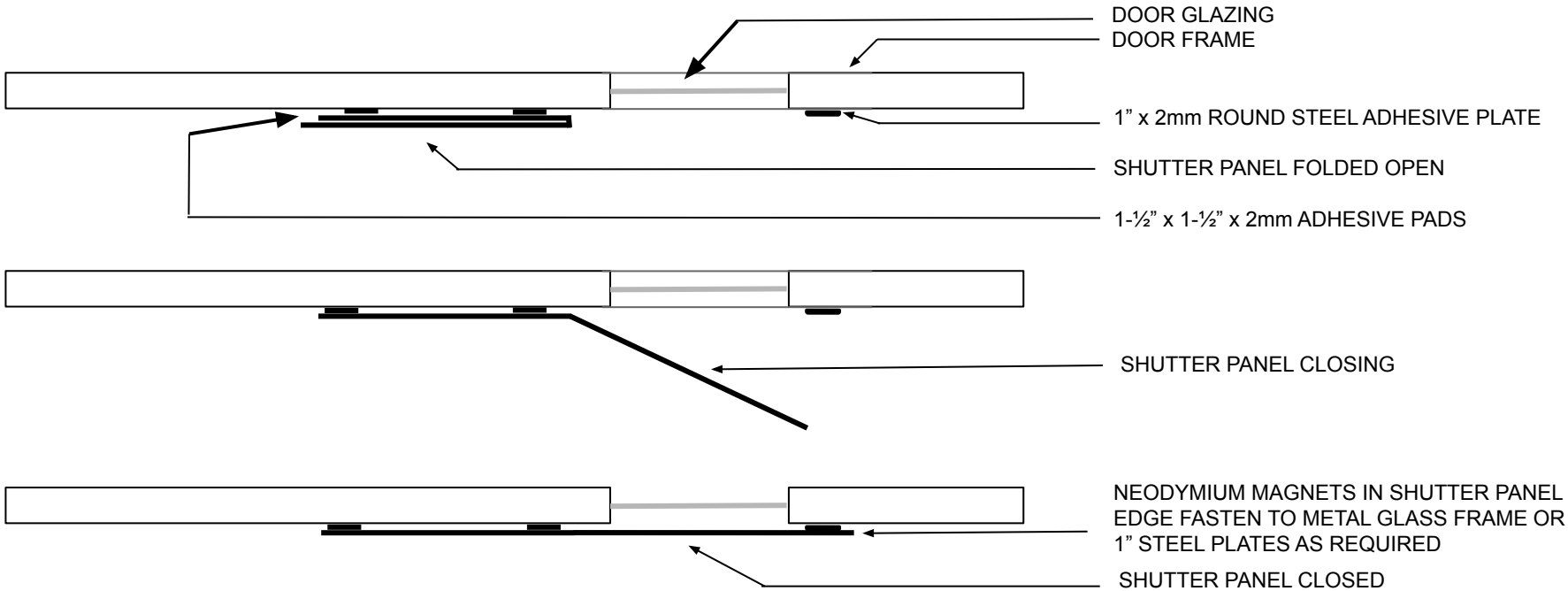
SINGLE FOLD 5” x 30” GLASS 8”x33” SHUTTER